PRODUCT CATALOG

Motoda Giken Co., Ltd.
Product Catalog

Motoda Giken Co., Ltd.

If you have any questions, please use the contact information below.
+81-42-683-1282 (Tokyo head office)
+81-568-42-7070 (Nagoya sales office)
info@motoda-giken.co.jp
www.motoda-giken.co.jp

MOTODA

MOTODA

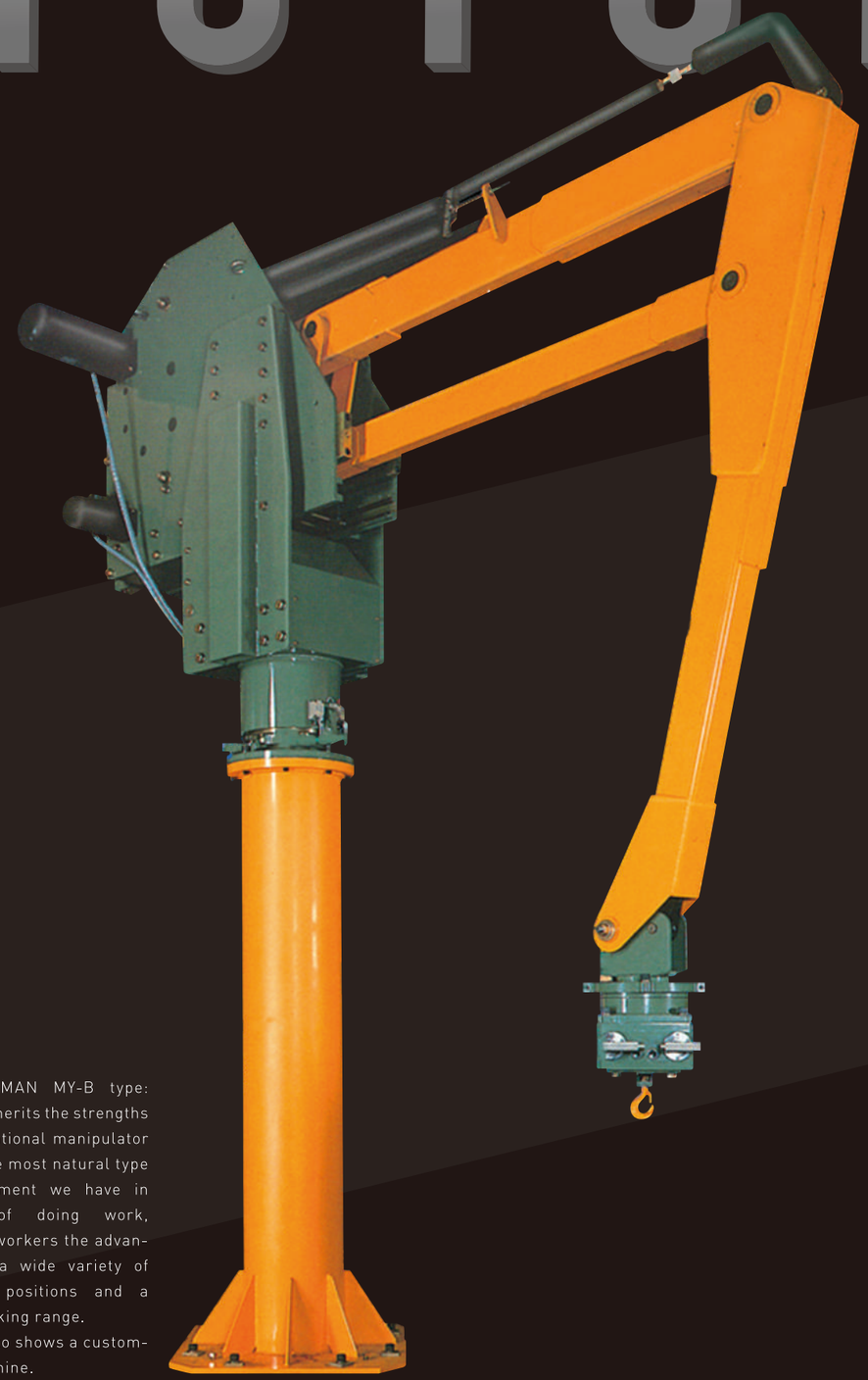

Basic Y-MAN MY-B type: Type B inherits the strengths of conventional manipulator and is the most natural type of equipment we have in terms of doing work, offering workers the advantage of a wide variety of working positions and a wide working range.
*The photo shows a customized machine.

We provide user-gentle Y-MAN manipulator.

The specifications and performance of Y-MAN manipulator differ depending on each customer's industry and the heavy goods they handle, and the associated needs are wide-ranging as well. We strive to respond to these needs as much as possible through customization. We create different products for each customer according to their needs, which means that our products are made-to-order. Our elite corps of engineers enable us to achieve a flexible production system, and we utilize its strengths to provide people-friendly Y-MAN manipulator designed to resolve various types of problems.

Product Information

MY-B

Natural, smooth movement

Type B inherits the strengths of conventional manipulator and is the most natural type of equipment we have in terms of doing work, offering workers the advantage of a wide variety of working positions and a wide working range.

Features

Drive system

A rack and pinion system is used for most of the power transmission.

Arm system

A cylindrical-coordinate type system with a hanging arm that uses a pantograph system

Drive motor

All Y-MAN models use an electric motor for their lifting actuators.

Type B models

MY-BS Standard models
MY-BSH High-speed models

Model		MY-BS*-5* (50-kg models)				MY-BS*-10* (100-kg models)				MY-BS*-18* (180-kg models)				MY-BS*-25* (250-kg models)			
		53C	54C	55C	56B	103B	104B	105B	106B	183B	184B	185B	186B	253B	254B	255B	256B
Lifting load (kg)		70	50	37	30	150	100	85	75	240	180	150	120	350	250	215	185
Vertical movement speed[m/min]	MY-BS	0~16	0~20			0~16	0~20			0~15	0~18			0~10	0~12		
Vertical movement speed[m/min]	MY-BSH	0~28	0~35			0~28	0~35			0~24	0~30			0~19	0~24		

Model		MY-BS*-30* (300-kg models)				MY-BS*-50* (500-kg models)				MY-BS*-70* (700-kg models)	
		303B	304B	305B	306B	503B	504B	505B	506B	704BW	705B
Lifting load (kg)		400	300	250	190	650	500	380	300	700	500
Vertical movement speed[m/min]	MY-BS	0~8	0~10			0~7	0~8			0~6	
Vertical movement speed[m/min]	MY-BSH	0~16	0~20			0~13	0~16			0~6	

* The shape might differ depending on the model.
* The B-704W uses a double arm.
* The lifting load includes the jig weight. Therefore, the weight of the attached jig has been subtracted from the indicated conveyable load.

☆ Option
By switching the configuration (a manufacturer option), it is possible to use a single-phase power supply. However, this increases the input power by about 1.2 times.

MY-B model specifications and dimensions

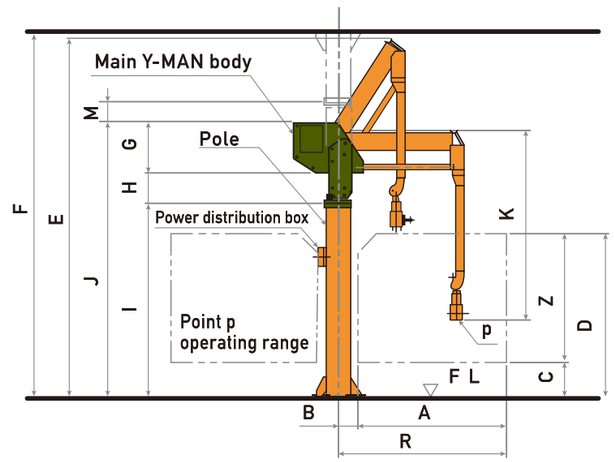

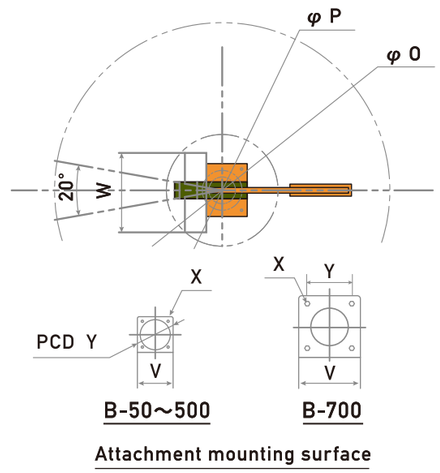

Dimension table

Model \ Dimensions	A (mm)	B (mm)	C (mm)	D (mm)	E (mm)	F (mm)	G (mm)	H (mm)	I (mm)	J (mm)	K (mm)	M (mm)	O (mm)	P (mm)	W (mm)	V (mm)	X (mm)	Y (mm)	Maximum turning radius (mm)
MY-BS-53	1320	180	300	1350	2974	3050	447	225	1587	2259	1575	218	3000	941	489	100	4-M10	100	1650
MY-BS-54	1792	208	300	1750	3647	3734	447	225	1995	2667	1835	218	4000	941	489	100	4-M10	100	2040
MY-BS-55	2188	312	300	2200	4575	4650	447	225	2574	3246	2315	218	5000	941	489	100	4-M10	100	2730
MY-BS-56	2610	390	300	2550	5310	5400	447	225	3019	3691	2635	218	6000	941	489	100	4-M10	100	3240
MY-BS-103	1320	180	300	1350	3068	3125	453	267	1635	2355	1629	229	3000	995	711	100	4-M10	100	1650
MY-BS-104	1792	208	300	1800	3690	3734	453	267	2009	2729	1889	229	4000	995	711	100	4-M10	100	2040
MY-BS-105	2188	312	300	2200	4715	4770	453	267	2670	3390	2349	229	5000	995	711	100	4-M10	100	2730
MY-BS-106	2610	390	300	2550	5403	5460	453	267	3070	3790	2689	229	6000	995	711	100	4-M10	100	3240
MY-BS-183	1350	150	300	1350	3048	3200	585	431	1459	2475	1643	386	3000	1291	765	100	4-M10	100	1630
MY-BS-184	1785	215	300	1750	3728	3875	585	431	1919	2935	1913	386	4000	1291	765	100	4-M10	100	2040
MY-BS-185	2200	300	300	2200	4519	4670	585	431	2424	3440	2264	386	5000	1291	765	100	4-M10	100	2580
MY-BS-186	2620	380	300	2550	5236	5490	585	431	2854	3870	2625	386	6000	1291	765	100	4-M10	100	3110
MY-BS-253	1275	225	300	1350	3162	3235	590	431	1507	2528	1749	411	3000	1386	800	125	4-M12	136	1680
MY-BS-254	1770	230	300	1750	3949	4055	590	431	1997	3018	2119	411	4000	1386	800	125	4-M12	136	2230
MY-BS-255	2175	325	300	2200	4729	4890	590	431	2482	3503	2487	411	5000	1386	800	125	4-M12	136	2790
MY-BS-256	2600	400	300	2550	5427	5600	590	431	2922	3943	2809	411	6000	1386	800	125	4-M12	136	3270
MY-BS-303	1275	225	300	1350	3162	3235	590	431	1507	2528	1749	411	3000	1386	800	125	4-M12	136	1650
MY-BS-304	1770	230	300	1750	3949	4055	590	431	1997	3018	2119	411	4000	1386	800	125	4-M12	136	2200
MY-BS-305	2175	325	300	2200	4729	4890	590	431	2482	3503	2487	411	5000	1386	800	125	4-M12	136	2740
MY-BS-306	2600	400	300	2550	5427	5600	590	431	2922	3943	2809	411	6000	1386	800	125	4-M12	136	3220
MY-BS-503	1400	400	300	1550	3786	3860	900	501	1629	3030	2158	501	3000	1418	800	125	4-M12	136	1840
MY-BS-504	1550	450	300	1750	4109	4175	900	501	1820	3221	2310	501	4000	1418	800	125	4-M12	136	2040
MY-BS-505	1970	530	300	2100	4785	4900	900	501	2200	3601	2673	501	5000	1418	800	125	4-M12	136	2490
MY-BS-506	2370	630	300	2500	5612	5720	900	501	2665	4066	3070	501	6000	1418	800	125	4-M12	136	3030
MY-BS-704W	1560	440	300	1450	4240	4290	1060	640	1645	3415	2450	580	4000	1880	870	230	4-M20	170	-
MY-BS-705	2040	460	300	2300	5300	5400	1060	640	2275	4045	2865	580	5000	1880	870	230	4-M20	170	-

Product Information

MY-C

A ground-based type with little risk of tipping over

Type C is set up and used on the ground. This makes it our most suitable type for use in workshops with low ceilings and similar environments. Because the machine's center of gravity is at a low position, it does not feel like there is any risk of the machine tipping over even if it is moved by using a dolly, etc.

Features

Drive system

A rack and pinion system is used for most of the power transmission.

Arm system

A cylindrical-coordinate type system with a hanging arm that uses a pantograph system

Drive motor

All Y-MAN models use an electric motor for their lifting actuators.
MY-CS type drive motor: AC servo motor

Type C models

MY-CS standard models
MY-CSH high-speed models

Model		MY-CS*-10* (100-kg models)				MY-CS*-18* (180-kg models)				MY-CS*-25* (250-kg models)				MY-CS*-50* (500-kg models)		
		103	104	105	106	183	184	185	186	253	254	255	256	504	505	506
Lifting load (kg)		150	100	85	75	230	180	150	120	350	250	215	185	500	380	300
Vertical movement speed(m/min)	MY-BS	0~16	0~20			0~12	0~15			0~9	0~12			0~8		
Vertical movement speed(m/min)	MY-BSH	0~28	0~35			0~14	0~30			0~16	0~24			0~16		

* The MY-C-506 comes with a horizontal drive system as an option.
* The MY-C-10* model is chain-driven.

MY-C model specifications and dimensions

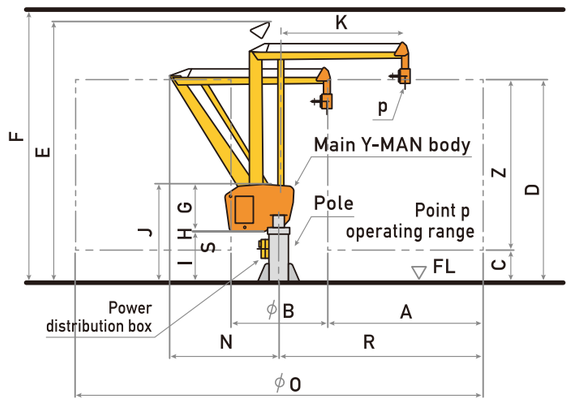

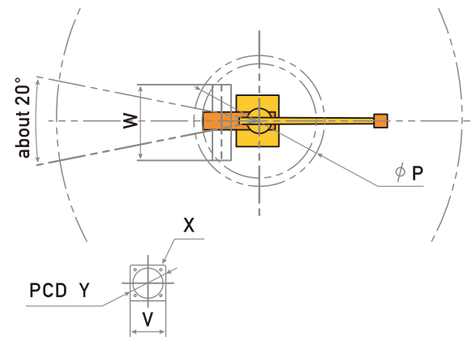

C-100~500

Attachment mounting surface

Dimension table

Model \ Dimensions	A (mm)	B (mm)	C (mm)	D (mm)	E (mm)	F (mm)	G (mm)	H (mm)	I (mm)	J (mm)	K (mm)	N (mm)	O (mm)	P (mm)	S (mm)	W (mm)	V (mm)	X (mm)	Y (mm)
MY-CS-103	1300	380	300	1400	1982	2050	410	12	384	806	1020	972	3000	1165	-	680	100	4-M10	100
MY-CS-104	1600	500	300	1800	2315	2400	410	12	460	882	1396	1150	4200	1165	-	680	100	4-M10	100
MY-CS-105	1819	681	300	2300	2835	2900	410	12	520	942	1851	1389	5000	1165	-	680	100	4-M10	100
MY-CS-106	2496	824	300	2700	3202	3250	410	12	545	967	2080	1586	6640	1165	-	680	100	4-M10	100
MY-CS-183	1269	571	291	1461	2037	2100	555	102	0	657	1409	1187	3680	1382	90	734	100	4-M10	100
MY-CS-184	1619	731	300	1860	2412	2500	555	102	16	677	1774	1401	4700	1382	90	734	100	4-M10	100
MY-CS-185	1852	838	300	2120	2667	2750	555	102	21	678	2045	1544	5380	1382	90	734	100	4-M10	100
MY-CS-186	2085	945	300	2380	2922	3000	555	102	26	683	2278	1687	6060	1382	90	734	100	4-M10	100
MY-CS-253	1153	517	300	1340	2018	2100	600	102	181	883	1392	1187	3340	1490	55	769	125	4-M12	136
MY-CS-254	1619	731	300	1860	2349	2400	600	102	280	982	1779	1401	4700	1490	55	769	125	4-M12	136
MY-CS-255	1852	838	300	2120	2560	2650	600	102	329	1031	2025	1544	5380	1490	55	769	125	4-M12	136
MY-CS-256	2085	945	300	2380	2771	2850	600	102	378	1080	2275	1687	6060	1490	55	769	125	4-M12	136
MY-CS-504	1243	917	300	1800	2675	2750	780	260	67	1107	1895	1305	4320	1549	115	769	125	4-M12	136
MY-CS-505	1491	1109	300	2175	3035	3100	780	260	142	1182	2257	1478	5200	1549	115	769	125	4-M12	136
MY-CS-506	1749	1301	300	2550	3305	3400	780	260	217	1257	2742	1700	6100	1549	115	769	125	4-M12	136

Product Information

MY-E

Also suitable for workshops that have low ceilings

The arms of type E models have two turning parts, so the work arm and main body arm can be turned separately. Because the work arm has additional movement variations, type E models can be used at locations with low ceilings, giving these models a wider working range.

Features

Drive system

A rack and pinion system is used for most of the power transmission.

Arm system

A cylindrical-coordinate type system with an arm that uses a parallel link system as well as vertical and horizontal articulation

Drive motor

All Y-MAN models use an electric motor for their lifting actuators.

Type E models

MY-ECS standard models
MY-ESH high-speed models

Model		MY-ES-5* (50-kg models)				MY-ES-10* (100-kg models)				MY-ES-18* (180-kg models)				MY-ES-25* (250-kg models)			
		53C	54C	55C	56C	103C	104C	105C	106C	183C	184C	185C	186C	253C	254C	255C	256C
Lifting load (kg)		60	50	37	30	120	100	75	60	220	180	145	110	300	250	200	165
Vertical movement speed(m/min)	MY-ES	0～16	0～20			0～16	0～20			0～15		0～20		0～10	0～12		
Vertical movement speed(m/min)	MY-ESH	0～17	0～21			0～17	0～20			0～15		0～20		0～10	0～12		

形式		MY-ES-50* (500-kg models)			
		503C	504C	505C	506C
Lifting load (kg)		600	500	380	300
Vertical movement speed(m/min)	MY-ES	0～4	0～5		
Vertical movement speed(m/min)	MY-ESH	0～4	0～5		

☆ Option
By switching the configuration (a manufacturer option), it is possible to use a single-phase power supply. However, this increases the input power by about 1.2 times.

MY-E model specifications and dimensions

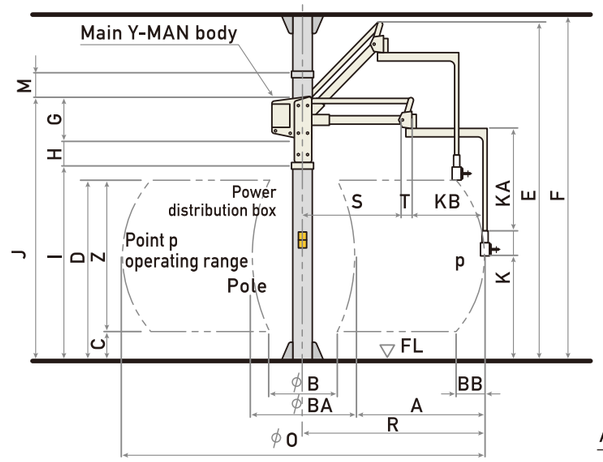

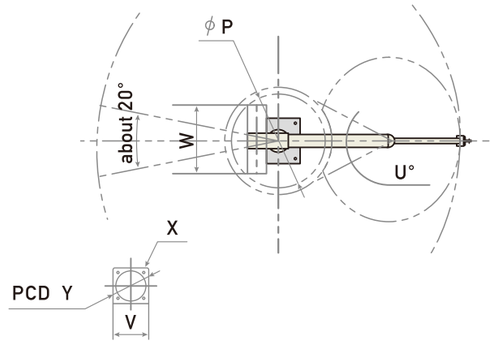

E-50～500
Attachment mounting surface

Dimension table

Model \ Dimensions	A (mm)	B (mm)	BA (mm)	BB (mm)	C (mm)	D (mm)	E (mm)	F (mm)	G (mm)	H (mm)	I (mm)	J (mm)	K (mm)	KA (mm)	KB (mm)	M (mm)	O (mm)	P (mm)	Q (mm)	S (mm)	T (mm)	W (mm)	V (mm)	X (mm)	Y (mm)
MY-ES-53	1056	674	888	253	300	1500	3072	3155	400	240	1805	2445	236	1034	485	240	3000	992	5	900	110	711	100	4-M10	100
MY-ES-54	1423	755	1153	302	300	1750	3325	3405	400	240	1930	2570	236	1034	805	240	4000	992	5	1080	110	711	100	4-M10	100
MY-ES-55	1907	960	1187	340	300	2050	3601	3680	400	240	2080	2720	236	1034	1125	240	5000	992	5	1260	110	711	100	4-M10	100
MY-ES-56	2342	1262	1316	404	300	2300	3854	3930	400	240	2205	2845	236	1034	1445	240	6000	992	5	1440	110	711	100	4-M10	100
MY-ES-103	889	766	1222	252	300	1500	3092	3155	440	240	1785	2465	236	1034	485	240	3000	992	5	900	110	711	100	4-M10	100
MY-ES-104	1423	754	1153	302	300	1750	3344	3405	440	240	1910	2590	236	1034	805	240	4000	992	5	1080	110	711	100	4-M10	100
MY-ES-105	1906	951	1187	353	300	2050	3621	3680	440	240	2060	2740	236	1034	1125	240	5000	992	5	1265	110	711	100	4-M10	100
MY-ES-106	2342	1262	1316	404	300	2300	3874	3930	440	240	2185	2865	236	1034	1445	240	6000	992	5	1440	110	711	100	4-M10	100
MY-ES-183	880	786	1239	253	300	1500	3073	3145	480	431	1525	2436	236	960	480	431	3000	1187	0	900	120	800	100	4-M10	100
MY-ES-184	1421	759	1158	303	300	1750	3325	3395	480	431	1650	2561	236	960	800	431	4000	1187	0	1080	120	800	100	4-M10	100
MY-ES-185	1902	947	1196	354	300	2050	3602	3670	480	431	1800	2711	236	960	1120	431	5000	1187	0	1260	120	800	100	4-M10	100
MY-ES-186	2338	1254	1323	422	300	2300	3854	3905	480	431	1925	2836	236	960	1440	431	6000	1187	0	1440	120	800	100	4-M10	100
MY-ES-253	1069	681	862	253	300	1500	3065	3150	530	431	1414	2375	238	912	475	431	3000	1157	-5	895	130	800	125	4-M12	136
MY-ES-254	1410	768	1179	303	300	1750	3317	3405	530	431	1539	2575	238	912	795	431	4000	1157	-5	1075	130	800	125	4-M12	136
MY-ES-255	1897	944	1205	353	300	2050	3595	3650	530	431	1689	2650	238	912	1115	431	5000	1157	-5	1255	130	800	125	4-M12	136
MY-ES-256	2338	1245	1324	404	300	2300	3847	3900	530	431	1814	2775	238	912	1435	431	6000	1157	-5	1435	130	800	125	4-M12	136
MY-ES-503	506	1470	1988	200	300	1500	9212	2985	790	560	892	2242	322	800	300	560	3000	1327	0	900	300	800	125	4-M12	136
MY-ES-504	1251	1467	1498	303	300	1750	3163	3235	790	560	1017	2367	322	800	620	560	4000	1327	0	1080	300	800	125	4-M12	136
MY-ES-505	1405	1605	2190	362	300	2100	3493	3565	790	560	1192	2542	322	800	900	560	5000	1327	0	1300	300	800	125	4-M12	136
MY-ES-506	1719	1876	2562	442	300	2500	3898	4005	790	560	1392	2742	322	800	1110	560	6000	1327	0	1890	300	800	125	4-M12	136

Attachments

We manufacture attachments on a made-to-order basis that can be used in various situations.

Safe, accurate, and easy to use.
Our various attachments designed for specific types of workpieces provide powerful backup to the Y-MAN series.

Grab

Manual clamps

Target workpieces

Clamps for box-shaped furniture, roll materials, containers, ring materials, block-shaped objects, round objects, round bars, and various oddly shaped objects

Dead-load type
outer diameter clamp jigs

Dead-load type
inner diameter clamp jigs

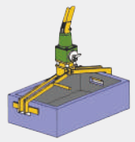

Tray clamp jigs

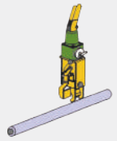

Lever-type clamp jigs

Pneumatic clamps

Target workpieces

Pneumatic clamps for box-shaped furniture, roll materials, containers, and various oddly shaped objects
Clamps for block-shaped objects, round objects, round bars, and various oddly shaped objects

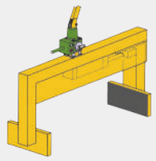

Pneumatic-cylinder-type
outer diameter clamps

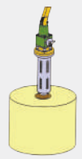

Pneumatic-shaft-type
inner diameter clamps

Scoop

Target workpieces

Work involving the hooking or scooping up of roll materials, box-shaped furniture, trays, and various oddly shaped objects

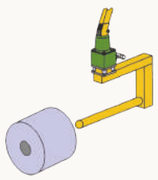

Fork-type jigs

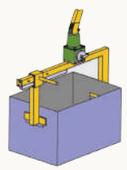

Slide-type jigs

We also offer various other types of jigs for the Y-MAN series, so please contact us for details.

Suck

Vacuum suction

Target workpieces

Application of vacuum suction to cardboard boxes, bags, glass plates, wooden boards, steel plates, other plate materials, and various oddly shaped objects

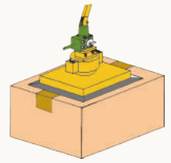

Turbo hand
(blowers)

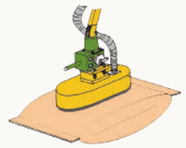

Vacuum-pump-type
suction jigs

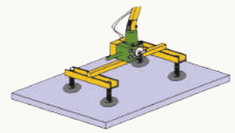

Ejector-type
suction jigs

Turbo hand specifications	
Power supply	AC100V 50/60Hz 1kW
Practical vacuum degree	2,000 mmAq (approximately 150 mmHg), approximately 1 m2 per minute
Equipment weight	10 kg (main body weight: 6 kg, pads, etc.: 4 kg). However, if large pads are used, the weight might exceed this.
Pad shapes	Square, rectangular, circular, elliptical, and other special shapes
Pad dimensions	150 to 700 mm (in 50-mm units) based on each side or the diameter
Options	L type, C type, whole-circumference handle, vacuum gauge, workpiece-confirmation-sensor backup power supply for blackouts, and one-touch pad replacement

Magnets

Target workpieces

Magnetically attracting steel plates, steel bars, and various steel materials

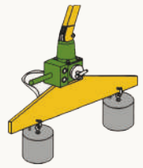

Electromagnets

Permanent magnets

Turn

Because arm-model type B, C and E (not F) support overhanging loads (eccentric loads), they make various working postures possible. Therefore, as long as you stay within the range of the allowable eccentric load, rotational work in various directions and at various angles is possible.

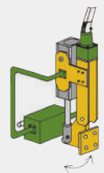

Pneumatic-cylinder-type
inversion jigs

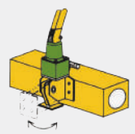

Electrically powered
inversion jigs

Installation Methods

Various installation methods are possible for the Y-MAN series depending on the customer's work environment. We offer various other options as well, so please contact us for details.

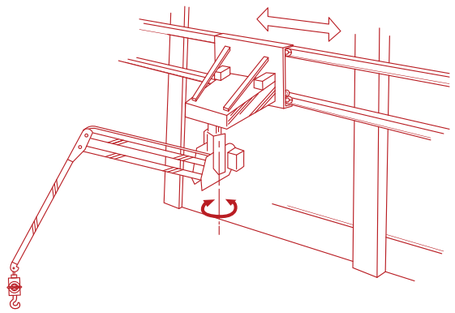

Wall-rail-based movement type

- For cases where the ceiling is extremely high.
- For cases where the ceiling is weak.
- For cases where it is not possible to install rails on the ceiling due to traveling cranes, etc.
- Electrically powered or manually operated

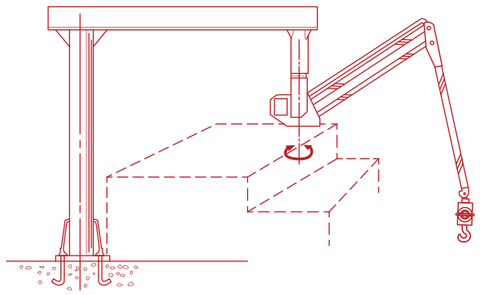

Fixed jib type

A Y-MAN installation method for which a pole is set up at a position where it will not get in the way of work and a fixed jib is extended

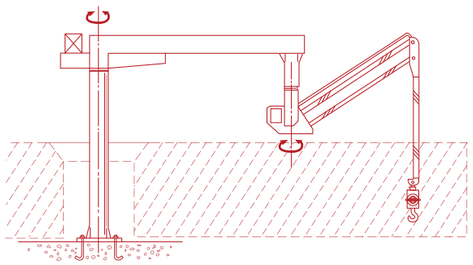

Electric jib type

The use of an electric jib to do work over a wide range

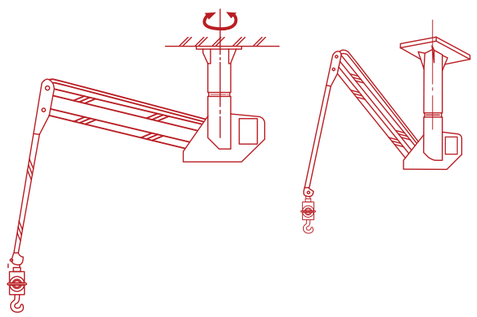

Ceiling-hung type

Because the Y-MAN is fixed to the ceiling without extending a pole from the ground, more workshop space can be used.

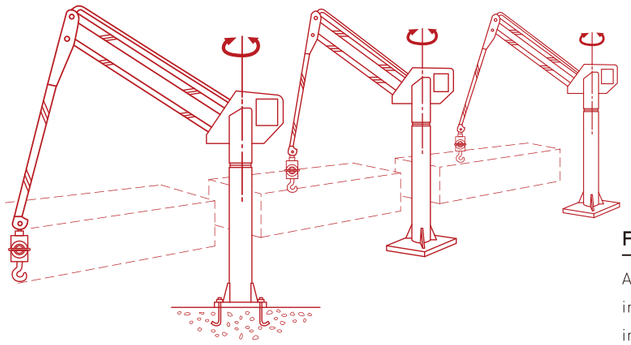

Fixed ground pole type

Anchor bolts are driven in to fix the Y-MAN in place. This is the standard type of installation and the one used most often.

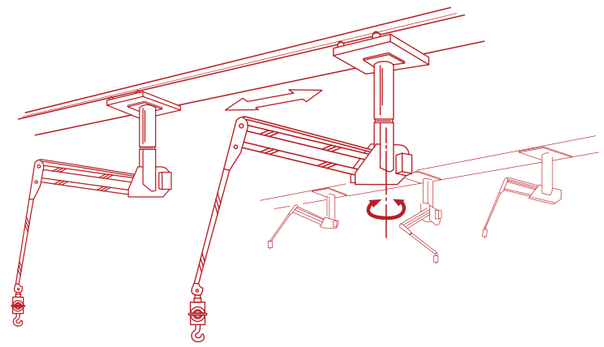

Overhead traveling dolly type

The Y-MAN is attached to a standard overhead traveling dolly for work.
Electrically powered dollies, manual dollies

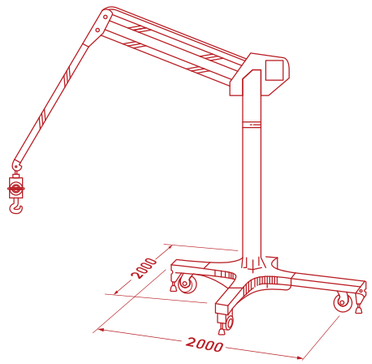

Type with ground-based-movement using a cross-shaped dolly

This type of installation is used for models that lift loads of 250 kg or less in cases where there are a lot of workshop changes.

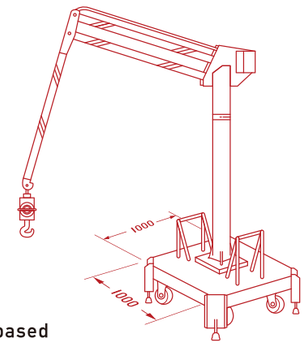

Type with ground-based movement using a 1,000-mm2 dolly

Movement is possible even at locations with narrow working paths.
Wide-ranging work with scaffolding is possible.

Installation methods

Optional Parts

We offer a comprehensive line-up of peripherals necessary to set up a Y-MAN.

1,000-mm2 bases

These bases are available for each type of Y-MAN model up to the 500 series. Casters can also be attached to bases that weigh 1,200 kg or less to use them as dollies.

Cross-shaped dollies

These can be used for each type of Y-MAN model. Selecting one of these dollies is recommended in cases of large machines or cases where you want to keep the overall weight down.

Horizontal joints

Use one of these if a control-panel offset is necessary. Both single and double types are available. In addition, both horizontal and vertical joints can be selected.

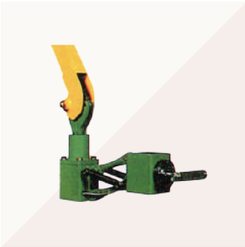

High-altitude levers

Use one of these if you cannot reach the control panel. Control is possible with a control-box distance of up to 1,000 mm.

Overhead traveling dollies

If you would like to use a Y-MAN over a wider range, overhead traveling dollies are available. Other traveling methods include ground-based rails, wall-based rails, etc., so please contact us for details.

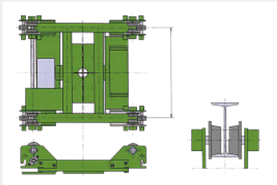

Y-MAN models	50 / 100 models, 180 models	250 models, 300 models	500 models, 700 models
Traveling speed	Approximately 15 mm / min.	Approximately 12 mm / min.	Approximately 10 mm per min.
Rail span	1,000 mm	1,500 mm	1,500 mm
Used rail size	Steel I-beams: 200 x 100	Steel I-beams: 250 x 125	Steel I-beams: 300 x 150
Power supply	AC 200 V, 0.4 kw	AC 200 V, 0.4 kw	AC 200 V, 0.4 kw
Dead load	Approximately 310 kg	Approximately 420 kg	Approximately 480 kg
Control method	Controlled using a push-button switch (so the dollies only move while the switch is held down)		